B1535 Wide Beam, 1000 lm, 1300 lm
B3537 Wide Beam, 2000 lm

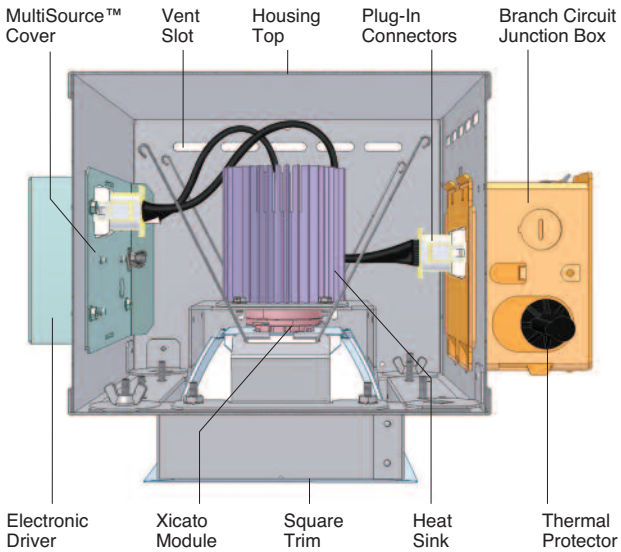

Dimensions and Sources

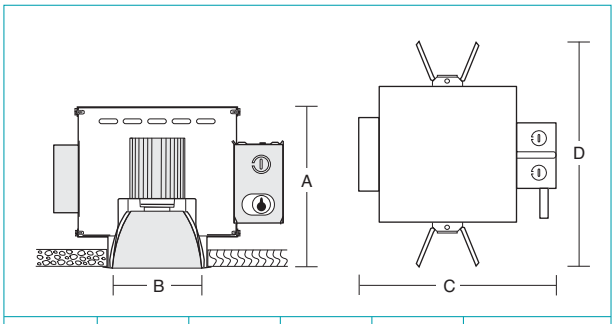

Number	A Depth	B Aperture	C Width	D Length	LED Module
B1535	8 3/8" 213mm	4 1/2" 114mm	12 1/8" 308mm	13 3/4" 349mm	1000 lm or 1300 lm Xicato
B3537	9 15/16" 252mm	4 1/2" 114mm	15 7/8" 403mm	16 3/8" 416mm	2000 lm Xicato

Energy and Ordering Information

Fixture	Module Lumens	Amps	System Lumens	System Watts	lm/W	Order Code Model L K V A
B1535	1000	700mA	824△	23	35.8	B1535 10 30 27 70
	1300*	700mA	711‡	18.4	38.7	B1535 13 30 27 70
	1300	1A	1042‡	27.4	38.1	B1535 13 30 27 1A
B3537	2000	1A	1646△	49	33.6	B3537 20 30 27 1A

Fixture provided standard as 3000K operating on 277V, specular cone. For other Kelvin color temperatures: change 30 to 27 for 2700K, 35 for 3500K, 40 for 4000K. For 120 volt change 27 to 12. Add D1 for Lutron to 1%, add DE for Lutron Eco to 1%. Finish: add SS for SoftSheen™. See accessories for colors.
e.g.: B153513302770SSD1 for B1535 1300 lm 3000K 277V 700mA with SoftSheen™ cone, Lutron dimming to 1%. *700mA not available with Lutron.
‡Indicates LM-79 Test Data. △Indicates Preliminary KV Test Data.

Downlight, 4 1/2" Square Parabolic Trim
Xicato Remote Phosphor
Fixed Function, MultiSource™ Technology

Optics and Applications
The parabolic curve of the square aperture is designed to produce a soft even pattern of light across the floor plane. The sealed corners and LED positioning allow the high efficiency fixture to provide deep shielding and low brightness. Suitable for low to high ceiling applications. Beam angle 75°.

Design Features - MultiSource™ Capable
Fixture housings are designed with MultiSource™ plug and play connectors allowing field conversion to PAR LED and MH MR-16 GX10 bases. New lighting technologies will be incorporated as they become available assuring continuity. The fixture incorporates an aperture assembly which slides ¼" in any direction and pivots 7° while maintaining optimum photometric performance. Propriety passive heat sinks ensure proper temperatures are maintained. Service from below only. Maximum ceiling thickness is 1½".

Modules
Xicato remote phosphor modules use high efficiency blue LEDs that convert to white light when directed through a phosphor lens. Standard lumen packages are 1000 lm module operating on 700mA driver, 1300 lm module operating on 1A driver, or 2000 lm module operating on 1A driver. 3000K, 80 CRI is standard. 2700K, 3500K, 4000K available. Rated Life is 50,000 hours at 70% lumen output.

Dimming Driver
Dimming is standard 0-10V/10%. See accessories for additional dimming options. Specify voltage.

Finish
Standard trim is anodized Softglow® clear. SoftSheen™ is a new finish that lowers apparent increased brightness due to remote phospher sources. Colors available, see accessories. Steel parts are phosphate conditioned then painted matte black to suppress light leaks.

Warranty
5 year limited. See KV website for manufacturers details.

General
Fixture is pre-wired and thermally protected, UL and C-UL listed, for damp location and eight wire, 75°C, branch circuit wiring. All products are union made IBEW. Designed and manufactured in the USA. B3537 requires marked spacing for fixture centers to be 24" from adjacent luminaire and 12" from nearest wall. Allow 3" clearance above unit in the plenum.

Accessories
SB Softglow black.
SG Softglow gold.
SH Softglow mocha.
SP Softglow graphite.
WT White trim flange.
R2 26" support rails.
R5 52" support rails.
F Fuse.
ST Softglow titanium.
SW Softglow wheat.
SY Softglow pewter.
SZ Softglow bronze.
WHT White complete cone.
FMH4 Flush mount, contact factory.
27 2700 Kelvin temp.
35 3500 Kelvin temp.
40 4000 Kelvin temp.
D1 Lutron to 1%, 3 wire control.*
DE Lutron EcoSystem to 1%, digital 4 wire.*
70 700mA Driver for 1300 lm module.* (N/A with Lutron)
*Specify voltage.
REM Remote Bodine EM. Includes battery pack, charger light, test switch and single lamp operation for 90 minutes. Ceiling access required.
SS SoftSheen™ add SS to color, or SS SoftSheen™ clear.
For Xicato Artist Series 95 CRI modules, contact factory.

kurt versen
Kurt Versen Company
Point Source Lighting
Westwood, New Jersey 07675

B1 B1535 B3537

Performance Datachart

Single Unit Initial Footcandles, 30" Work Plane							Ceiling to Floor	Multiple Units Initial Footcandles, 30" Work Plane			
B1535* Xicato 1300 lm 3000K 700mA Read Top B1535 Xicato 1300 lm 3000K 1Amp Read Bottom								Ceiling 80% Walls 50% Floor 20%			
Nadir	20°		30°		40°			Spacing is Maximum Over Work Plane			
FC	FC	Diam	FC	Diam	FC	Diam		Spacing	RCR 1	RCR 3	RCR 8
14 21	12 18	4' 4'	9 13	6' 6'	3 4	9' 9'	8'	7' 7'	15 22	13 19	9 13
10 15	9 13	5' 5'	6 9	8' 8'	2 3	11' 11'	9'	8' 8'	11 16	9 13	6 9
8 11	7 10	5' 5'	5 7	9' 9'	1 2	13' 13'	10'	10' 10'	8 12	7 10	5 7
6 9	5 8	6' 6'	4 5	10' 10'	1 2	14' 14'	11'	11' 11'	6 9	5 8	4 5
5 7	4 6	7' 7'	3 4	11' 11'	1 1	16' 16'	12'	12' 12'	5 7	4 6	3 4

*For 1000 lm 3000K module 700mA multiply by .8.

Candlepower Distribution

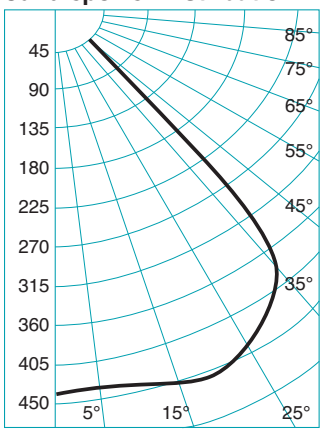

B1535 Xicato 1300 lm 3000K 700mA
Luminous efficacy 38.8 S/M 1.30

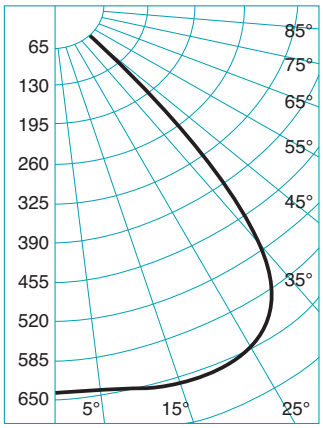

B1535 Xicato 1300 lm 3000K 1Amp
Luminous efficacy 37.9 S/M 1.30

Candelas

	18W	27W
°	699*	1022*
0	437	639
5	439	642
10	445	650
15	451	658
20	452	661
25	443	649
30	416	610
35	348	509
40	185	270
45	85	123
50	43	63
55	31	45
60	22	32
65	15	22
70	10	15
75	6	9
80	3	5
85	0	0
90	0	0

° Vertical Angles
* Luminaire Lumens

Notes

1 Photometric Reports: B1535 (1300 lm/700mA) LTL Report No. 25353, B1535 (1300 lm/1A) LTL Report No. 25355. For B3537 data, contact factory.

2 Data on all charts calculated with a clear Softglow® trim finish.

3 Softglow® colored trim multipliers, contact factory.

4 SoftSheen™ trim multipliers, contact factory.

5 Datachart degree headings measured one side from nadir. Diameter data includes both sides. Therefore the 15° column value describes a 30° pattern diameter at the work plane 30" above the floor. Footcandle values are at the diameter edge.

6 Datachart spacing is rounded off to the nearest foot.

7 Brightness data from the Average Luminance Method are inaccurate for downlights. They are theoretical calculations for large surfaces such as troffer lenses. We recommend the stricter standard of Maximum Brightness Method point data from direct photometer readings. They approximate what the human eye perceives when evaluating glare. For more information refer to Z section brochure Z1.

8 The luminous efficacy (lm/W) refers to the total measured luminous flux (lumens) of the fixture divided by the total measured electrical input power (watts) of the complete fixture.